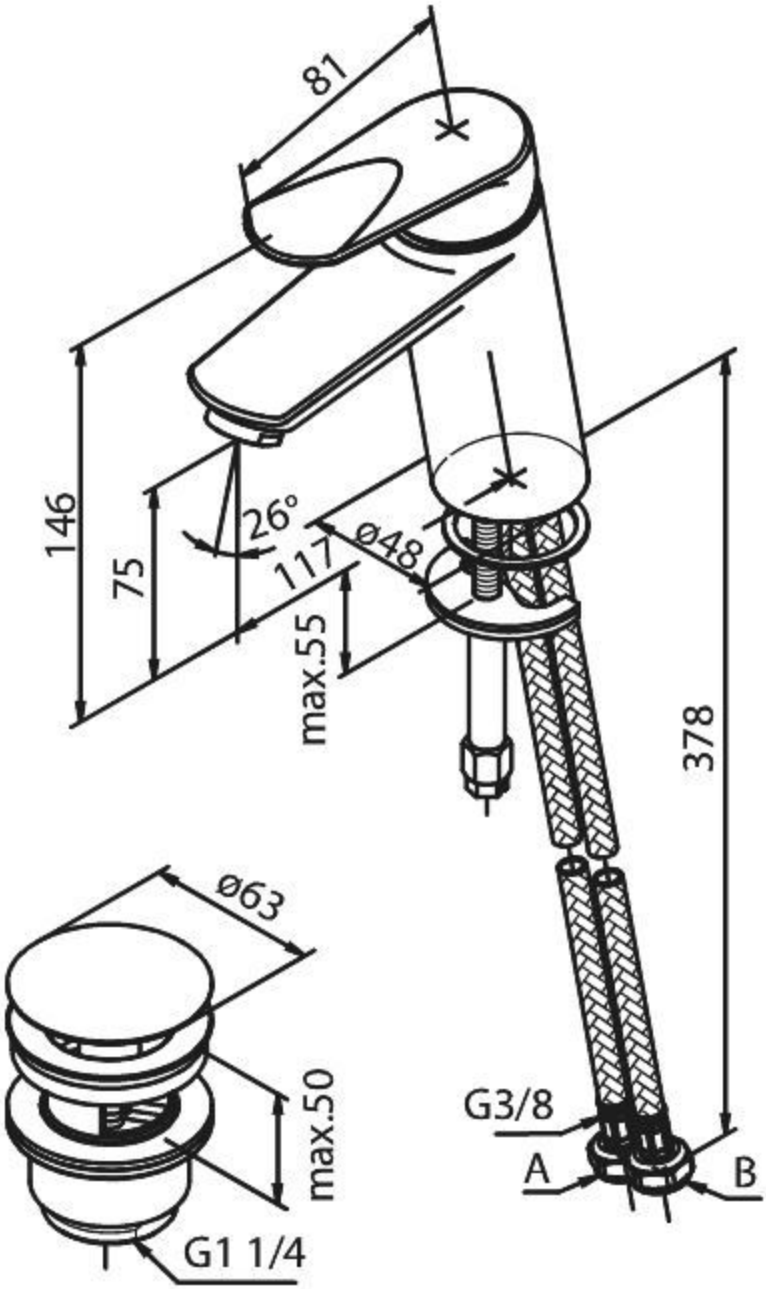
81
146
75
26°
117
Ø48
max.55
378
Ø63
max.50
G1 1/4
G3/8
A
B